# Lōdril TR40_Komatsu

## Plant Information

GROUND BELOW

**SPECIFICATIONS:**

TORQUE - 43,000 FT.LBS [58.3 kNm]
DRILLING DEPTH - 62 FT [18.90 m]
BASE MACHINE - KOMATSU PC200 LC-8
DRILL SPEED - 0 TO 60 RPM
SPIN OFF - 100 RPM
CROWD STROKE - 168 IN [4.27 m]
CROWD FORCE - 21,300 LBS [9,662 kg]
KELLY WINCH - 18,000 LBS [8,165 kg] (FIRST LAYER, RAPID REVERSE OPTIONAL)
SERVICE WINCH - 8,500 LBS [3,856 kg] (FIRST LAYER, OPTIONAL)
SIDE TILT - 10 DEG. LEFT/RIGHT
KELLY BARSET - 4 ELEMENT RLK
ATTACHMENT WEIGHT - APPROX. 8,900 LBS [4,037 kg]
BARSET WEIGHT - APPROX. 4,800 LBS [2,177 kg]
TRANSPORT WEIGHT - APPROX. 62,700 LBS [28,440 kg]

REVISION HISTORY

| REV | DESCRIPTION | DATE | APRV'D |
|---|---|---|---|

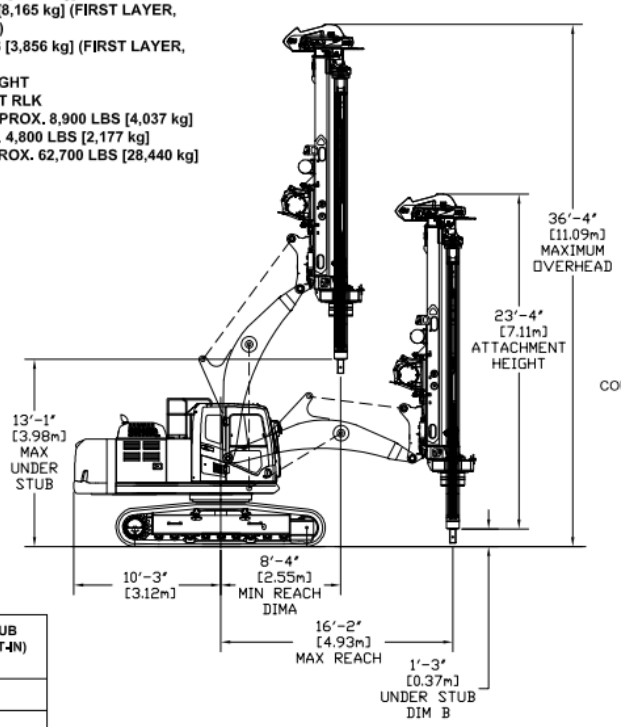


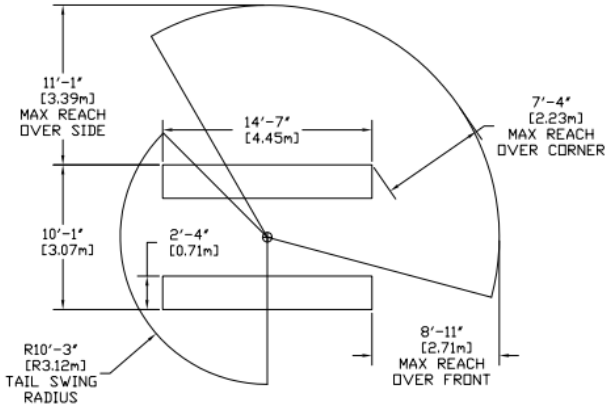


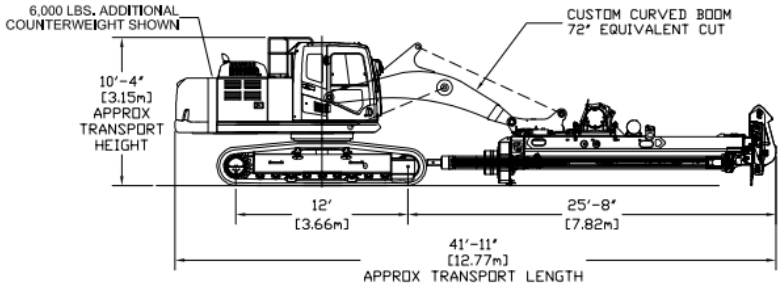


| RADIUS FROM CENTER (FT-IN) [DIM A] | UNDER STUB HEIGHT (FT-IN) [DIM B] |
|---|---|
| 8'-4" | 13'-1" |
| 10' | 12-2" |
| 12' | 10'-8" |
| 14' | 8'-4" |
| 16'-2" | 1'-3" |

| ITEM | QTY | MATERIAL/PART NUMBER |
|---|---|---|
| | | Parts List |

MODEL: TR40
JOB: XXXXXX
N/A
HEAT TREAT: N/A

DRAWN JANDRING
DATE 5/9/2017

Bay Shore Systems
INCORPORATED

TITLE TR40-62, RLK BARSET ON KOMATSU PC200 LC-8

SIZE D | DWG NO B01-243001 | REV -
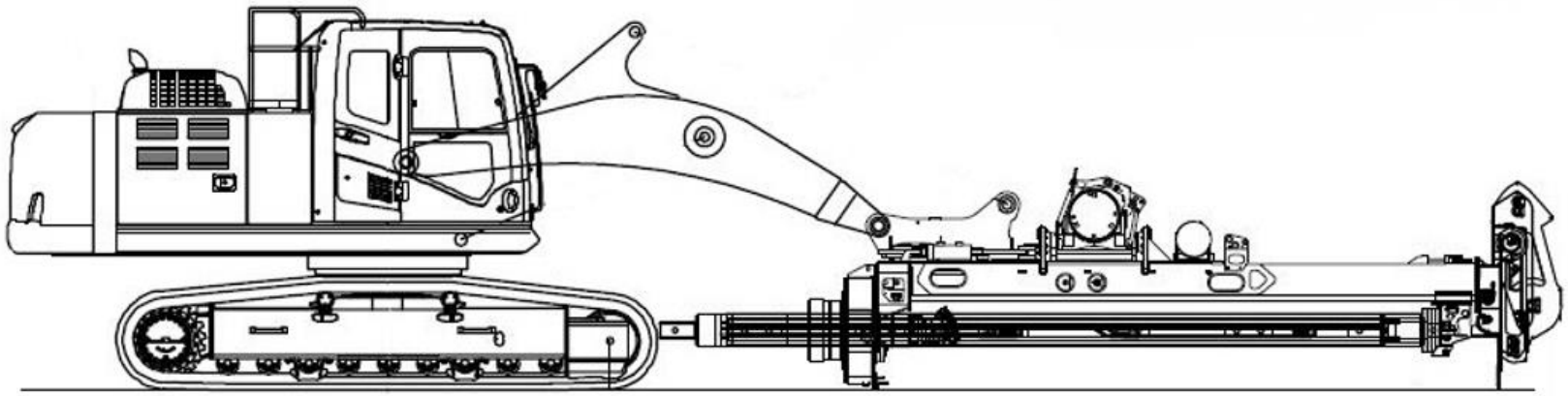
SCALE NTS | SHEET 1 OF 1